MECBO

AUT 35

TRUCK MOUNTED PUMP

Truck	3 axles
Distributor boom	AZ-35.5/125-2XP
Pumping group	P6 / P7

Designed & Made in Italy

PULSAR SYSTEM

MECBO

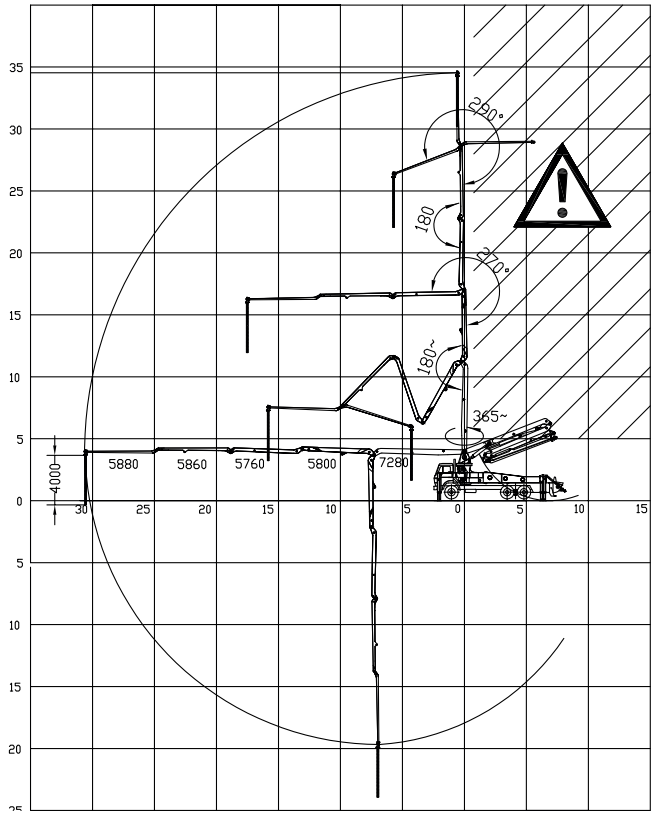

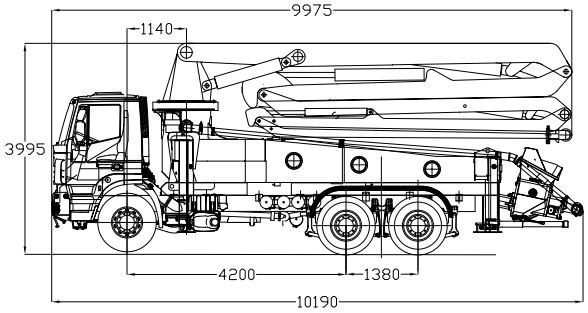

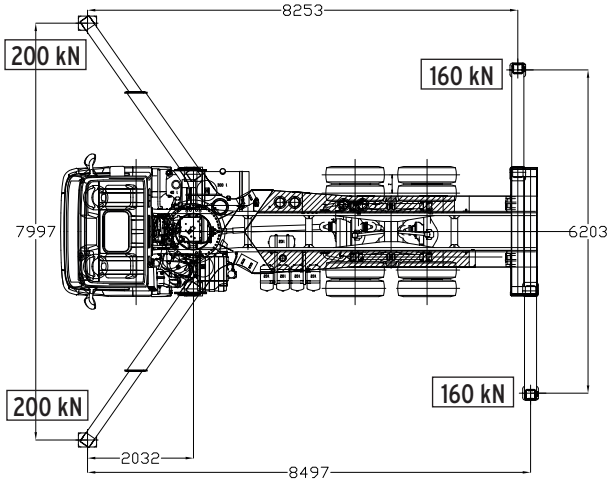

BRACCIO DISTRIBUTORE DISTRIBUTOR BOOM FLECHE DISTRIBUTEUR VERTEILERMAST		GRUPPO POMPANTE PUMPING GROUP GROUPE DE POMPAGE PUMPENGRUPPE			
Diametro tubazione Pipeline diameter Diamétre de la tuyauterie Forderleitung Durchmesser	**125 mm**	Pompa tipo Pump type Pompe type Pumpeart	**P6.90**	**P6.110**	**P7.150**
Raggio orizzontale Horizontal reach Portée horizontale Horizontalablenkung	**29,6 m**	Diametro dei cilindri Cylinders diameter Diamétre cylindres Zylindersdurchmesser	**200 mm**	**200 mm**	**230 mm**
Altezza massima Max. vertical reach Portée verticale Max. Höhe	**34,6 m**	Corsa Stroke Course Schlaganfall	**1800 mm**	**2000 mm**	**2000 mm**
Min. altezza apertura Min. openig height Min. hauteur d'ouverture Min.Offnungshöhe	**6,6 m**	Diametro uscita Outlet diameter Diamétre sortie Austrittsdurchmesser	**150 mm (6" ½)**	**150 mm (6" ½)**	**150 mm (6" ½)**
Numero di sezioni Sections Number Nombre de sections Anzahl der Abschnitte	**5 ZR**	Volume tramoggia Hopper capacity Capacitè trémie Kapazität des Trichters	**620 l**	**620 l**	**600 l**
Rotazione torretta Slewing range Rotation de la tourelle Turmdrehung	**365°**	Pressione in uscita Outlet pressure Pression sortie Betondruck	**70 bar**	**70 bar**	**70 bar**
Pressione oleodinamica Hydraulic pressure Pression hydraulique Hydraulikdruck	**320 bar**	Portata calcestruzzo Concrete output Débit béton Beton Fordermenge	**90 m³/h**	**110 m³/h**	**150 m³/h**
Tensione imp. Elettrico Electrical voltage Tension électrique Spannung des Elektr.System	**12-24V**	Peso gruppo pompante Pumping Group weight Poids groupe pompage Pumpegewicht	**1750 kg**	**1950 kg**	**2300 kg**

Inclusi nella fornitura doppio circuito idraulico, pompa acqua, serbatoio. acqua, compressore, telecomando, radiocomando, sistema di stabilità "Full Range" (EN 12001:2012). Supplied with double hydraulic circuit, water pump and tank, air compressor, remote control by cable, wireless radio control, stability system "Full Range" (EN 12001:2012). Inclus double circuit hydraulique, pompe à eau, réservoir eau, compresseur, télécommande, radiocommande, système de stabilité "Full Range" (EN 12001:2012). Inbegriffen doppelt Hydraulikschaltung, Wasserpumpe, Wassertank, Kompressor, Kabel-Fernbedienung, Radio-Fernbedienung, Stabilitätssystem "Full Range" (EN 12001:2012).

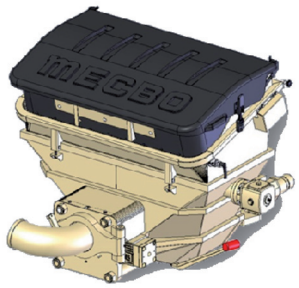

OPTIONAL – EN OPTION – FAKULTATIV

VIBRATORE – VIBRATOR
VIBRATEUR – VIBRATOR

SISTEMA STABILITA' "SINGLE SIDE RANGE" (EN 12001:2012)
STABILITY SYSTEM "SINGLE SIDE RANGE" (EN 12001:2012)
SYSTEME DE STABILITE' "SINGLE SIDE RANGE" (EN 12001:2012)
STABILITÄTSSYSTEM "SINGLE SIDE RANGE" (EN 12001:2012)

TUBAZIONE E ACCESSORI
PIPELINES AND ACCESSORIES
TUYAUTERIES ET ACCESSOIRES
ROHRLEITUNG UND ZUBEHORE

LUBRIFICAZIONE AUTOMATICA LINCOLN
LINCOLN AUTOMATIC LUBRICATION
LUBRIFICATION AUTOMATIQUE LINCOLN
AUTOMATISCHE SCHMIERUNG

I presenti dati tecnici hanno valore indicativo. Con l'evolversi della tecnologia, i dati esposti potranno subire modifiche senza preavviso. Le richieste tecniche specifiche debbono essere sempre accettate dalla nostra Direzione con conferma scritta.The present technical data have indicaive value. Owing the technology development, all above mentioned details maybe changed without any notice. All specific technical request must be always accepted from our Management by written confirmation.

MECBO s.r.l.
Sede e stabilimento: Via Umbria, 10/12/14 – 40024 Osteria Grande (Bo) – ITALY – Tel.: 051.945085 – Fax: 051.945220 Servizio Ricambi: Tel. 051.946485
Website: www.mecbo.it – E_mail: info@mecbo.it – P.IVA 00508751203 – C.F. 00418580379 – Reg. Imprese Bologna 19791